XCMG
SOLID TO SUCCEED

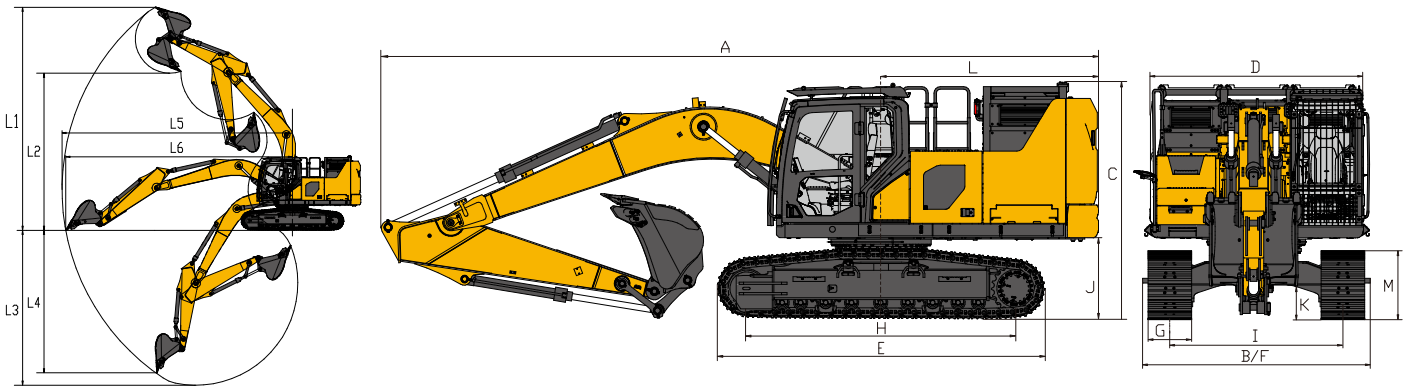

Technical Specification

Model	Unit	Parameter
Operating weight	kg	24100
Bucket capacity	m³	1.1
Battery replacement time	min	≤15
Electric motor		
Electric motor model	/	TZ380XSSF150A
Continuous mechanical output power	kW	150
Maximum output torque	N·m	1500
Protection level	/	IP68
Insulation level	/	H
Cooling method	/	Liquid cooling
Battery		
Battery voltage	V	579.6
Battery power	kWh	396.44
Standard charging current	A	400（Dual power）
Main performance		
Travel speed（H/L）	km/h	5.4/3.0
Swing speed	r/min	12
Gradeability	°	≤35
Ground pressure	kPa	48.8
Bucket digging force	kN	149
Arm digging force	kN	116
Hydraulic system		
Main pump	/	2×plunger pump
Rated flow of main pump	L/min	2*221
Main relief valve pressure	MPa	34.3/37
Travel system pressure	MPa	34.3
Swing system pressure	MPa	27.5
Pilot system pressure	MPa	3.9
Hydraulic tank		
Hydraulic tank capacity	L	150

Model	Unit	Parameter
Appearance size		
A Overall length	mm	9725
B Overall width	mm	2990
C Overall height	mm	3185
D Width of platform	mm	2940
E Track length	mm	4440
F Overall width of undercarriage	mm	2990
G Track shoe width	mm	600
H Tumbler distance	mm	3649
I Track gauge	mm	2390
J Counterweight clearance	mm	1080
K Minimum ground clearance	mm	490
L Minimum tail swing radius	mm	2950
M Track height	mm	940
Working scope		
L1 Maximum digging height	mm	9620
L2 Maximum dumping height	mm	6780
L3 Maximum digging depth	mm	6680
L4 Maximum vertical digging depth	mm	6145
L5 Maximum digging radius	mm	9940
L6 Maximum digging radius in horizontal plane	mm	9800

Product Highlights

- Green and environmentally friendly. Pure electric power, hydraulic transmission, zero emissions, zero pollution, low noise, meeting the requirements of various environmentally friendly working conditions.
- Powerful, efficient and energy-saving. Customized 150kW high-torque permanent magnet synchronous motor, the operating efficiency can reach up to 95%, and the cost per hour is more than 40% lower than that of fuel products.
- High security. Battery testing has the testing and certification capabilities of CNAS and other institutions, and can implement 48 safety tests and 125 reliability tests such as impact tests, extrusion tests, waterproof tests, acupuncture tests, etc., combined with the use characteristics of engineering machinery, equipped with XCMG's self-developed electrical Control system, safe and secure, more secure to use.
- High reliability. Forwardly developed high-standard three-electric system, automotive-grade key electronic components, expert-level manufacturing, meeting IP68 electrical protection standards, key controls using redundant design, strong electromagnetic compatibility, high fault tolerance rate, and more reliable performance.
- Comfortable driving and simple maintenance. Supercharged cab, 360° all-round driving view, better dustproof effect; intelligent heating and cooling air conditioner, automatic temperature adjustment, more comfortable operation; maintenance at your fingertips, less regular maintenance and low maintenance cost; positive flow hydraulic system, the control performance is better.

Materials and specifications are subject to change. All rights reserved without prior notice.

XCMG
SOLID TO SUCCEED

XE215E

Battery Replaceable Excavator



- Operating weight (kg) : 24100
- Bucket capacity (m^3) : 1.1
- Continuous mechanical output power (kW) : 150

● XCMG's XE215E battery-swappable pure electric hydraulic excavator implements the national "double carbon" goal and continues to lead the development direction of clean energy excavating machinery. The custom-developed lithium iron phosphate anti-vibration battery system has long life and high safety; the all-in-one integrated control system is small in size and highly integrated. Leading BMS system management and control, coupled with high-power TMS liquid cooling and liquid thermal management systems, make the battery system more efficient. Highly sensitive battery replacement early warning monitoring, industry-leading. Double battery replacement protection and mechanical battery replacement box tip-over device ensure safe operation; one-button battery replacement operation makes use comfortable.