All Rights Reserved

Materials and specifications are subject to change without notice.

Featured machines in photos may include additional equipment.

See your XCMG dealer for available options.

XCMG

ALL TERRAIN CRANE

XCA130_E

Intelligent five-axle all terrain crane with high job site transfer performance



XUZHOU CONSTRUCTION MACHINERY GROUP IMP. & EXP. CO., LTD

Address: No.1, Tuolanshan Road, Xuzhou Economic Developing Zone, Jiangsu, China 221004

Tel: + 86(0) 516 8773 9703 Fax: + 86(0) 516 8773 9230

E-Mail: europe@xcmg.com

XCMG CRANE XCMGCRANE.OFFICIAL

max 130 t | max 62 m | max 92.5 m



Superb operating performance

Superb driving performance

XCMG human-machine interactionsystem

Smart and safe control

01

SUPERB OPERATING PERFORMANCE

- With fully extended boom of 62 m and the maximum boom + jib length of 94.5 m, the crane with the six-section boom leads the world in working range and has the strongest operating performance in the industry.



NEW ENERGY-SAVING HYDRAULIC SYSTEM

- The min. stable slewing speed is 0.1° /s.
- The min. stable lifting speed (drum) is 0.8-1m/min.
- Precise and safe lifting movements can be realized.
- Double-pump separate and confluence control technology brings the best simultaneous movements performance in the industry with higher working efficiency.

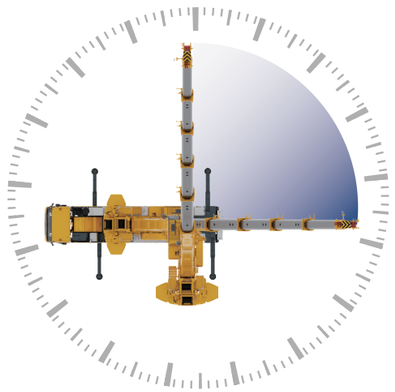

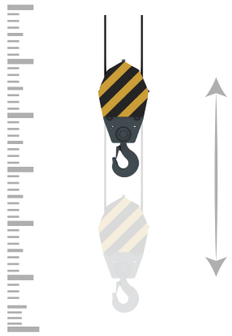

ADVANCED POWER PERFORMANCE

- Four driving axles with three axles driving during road traveling, matching low speed large torque power transmission system, contribute to perfect combination of optimal power and optimal economical efficiency, leading to more than 12% reduction in fuel consumption and 6.2% improvement in grade ability.
- The fuel saved is 500 L by calculation according to 10,000 km per year, compared with competitive products.



Improvement in grade ability

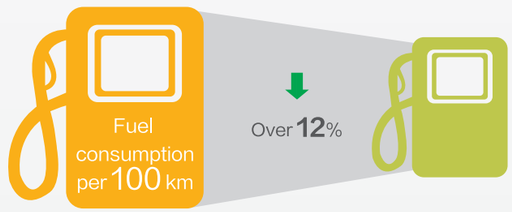

Reduction in fuel consumption

EFFICIENT AND FLEXIBLE JOB SITE TRANSFER

- Jib and counterweight of 6.2 t or 9 t can be carried under 12 t axle load. During job site transfer, 25.8 t counterweight can be carried under 16.5 t axle load. It also has short job site transfer capability with full counterweight.

HEAVY-DUTY SINGLE-TRANSVERSE ARM INDEPENDENT SUSPENSION

- Innovative heavy-duty single-transverse arm independent suspension contributes to excellent off-road traveling capacity and 15% higher operation stability
- The tires on left and right side move up/down separately to adapt to the road conditions, to effectively enhance the stability of steering operation at high speed and achieve excellent off-road performance when driving on the narrow road or the road with poor road conditions.
- Functions such as automatic leveling, moving up and down of suspension, and switching over of elastic and rigid suspension are available
- The cylinder stroke is -150mm ~ 150mm

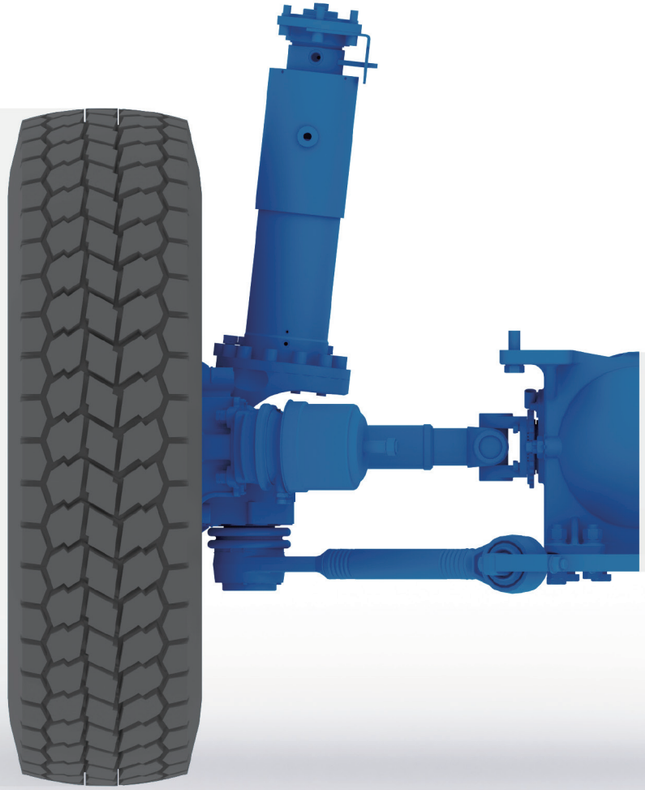

POWERFUL DRIVE TRAIN AND SUPERIOR DRIVING PERFORMANCE

- Daimler OM471diesel engine, with rated power of 360kW and Max. output torque of 2400N.m (Stage V)
- ZF 12-speed AMT automatic transmission
- Max. travel speed is 80km/h, and max. grade ability is 60%

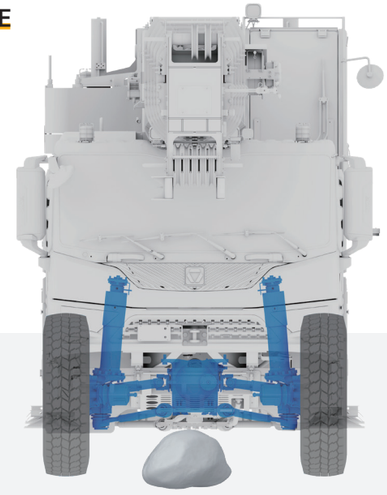

Raise suspension at center

BRAKING SYSTEM

- Dual-circuit pneumatic disc brake
- Axles 2, 4 and 5 with spring-loaded brakes
- Auxiliary : engine and transmission retarder brake

STEERING SYSTEM

- All-axle steering with tight turning radius, 8WD is suitable for rough road traveling
- 1, 2 axles are steered mechanically with hydraulic servo, and electric-control hydraulic steering is available for 3, 4 and 5 axles
- 5 steering modes can be selected through a knob switch
- Min. turning diameter is 18 m

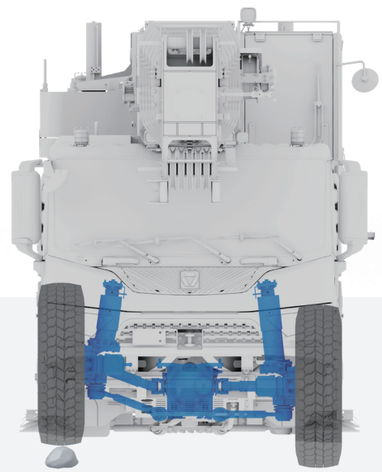

Raise single wheel

XCMG HUMAN-MACHINE INTERACTION SYSTEM

- First launched in the industry, the car-level human-machine interaction system achieves operator-friendly interaction with the machine. Information about lifting or driving operations will be known easily, contributing to easier and more convenient operation.



DRIVER'S CAB

- 12.3-inch color display with large screen makes indication clear
- Air-suspension seats are equipped for both driver' s seat and co-driver' s seat
- Air conditioning for both heating and cooling is available

OPERATOR'S CAB

- Information about lifting or driving operations will be known easily, contributing to easier and more convenient operation
- The boom head, winch and counterweight cameras are convenient for the operator to observe the operation state.
- The cab is installed with electric telescopic pedal.



FUNCTIONS WITH HIGH ADAPTABILITY

- The chassis power adopts European high-end brand configurations: Benz engine + ZF transmission + Kessler axle.
- Equipped with functions and configurations preferred by European users such as telescoping with load, intelligent lighting system, vibration joystick, trailer coupling device, stepless luffing jib, independent jib head, boom extension, electric eddy-current retarder brake, emergency power and outboard toolbox, etc.

SMART AND SAFE CONTROL

- Industry-leading intelligent crane boom technology is adopted with functions, such as automatic planning of working conditions, automatic luffing compensation and automatic spooling in/out of winch rope integrated into one, which provides the most intelligent planning of working conditions and operation safety protection.

AUTOMATIC PLANNING OF WORKING CONDITIONS

- After the information about lifting load, the initial and final working radii, and lifting height are entered into the display, the system will automatically recommend the most proper working conditions to meet lifting demands.



CONTROL TECHNOLOGY OF WINCH ROPE SERVO ACTION

- During telescoping and luffing operations, the control system automatically controls the spooling in and out of winch rope, leading to more than 20% reduction in operating time, as well aseasier, safer and more reliable operation.

LUFFING COMPENSATION CONTROL TECHNOLOGY

- Through controlling boom angle, this technology can automatically compensate radius change caused by boom deformation while the load is clearing of the ground, so as to avoid impaired vertical load lifting due to deflection increase of boom, bringing an easier and safer lifting process.
- With convenient wireless remote control, it can realize outrigger extending/retracting, luffing, lifting, counterweight erection and jib folding/unfolding operations, which enables operation by only one person with lower cost.

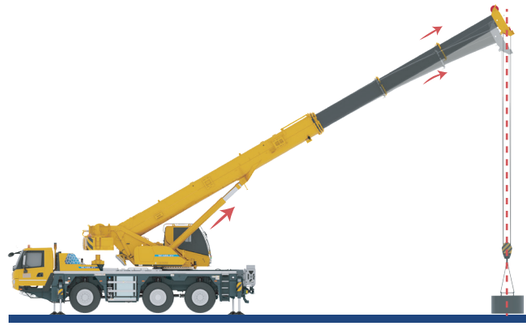

Load/Height Chart XCA130_E



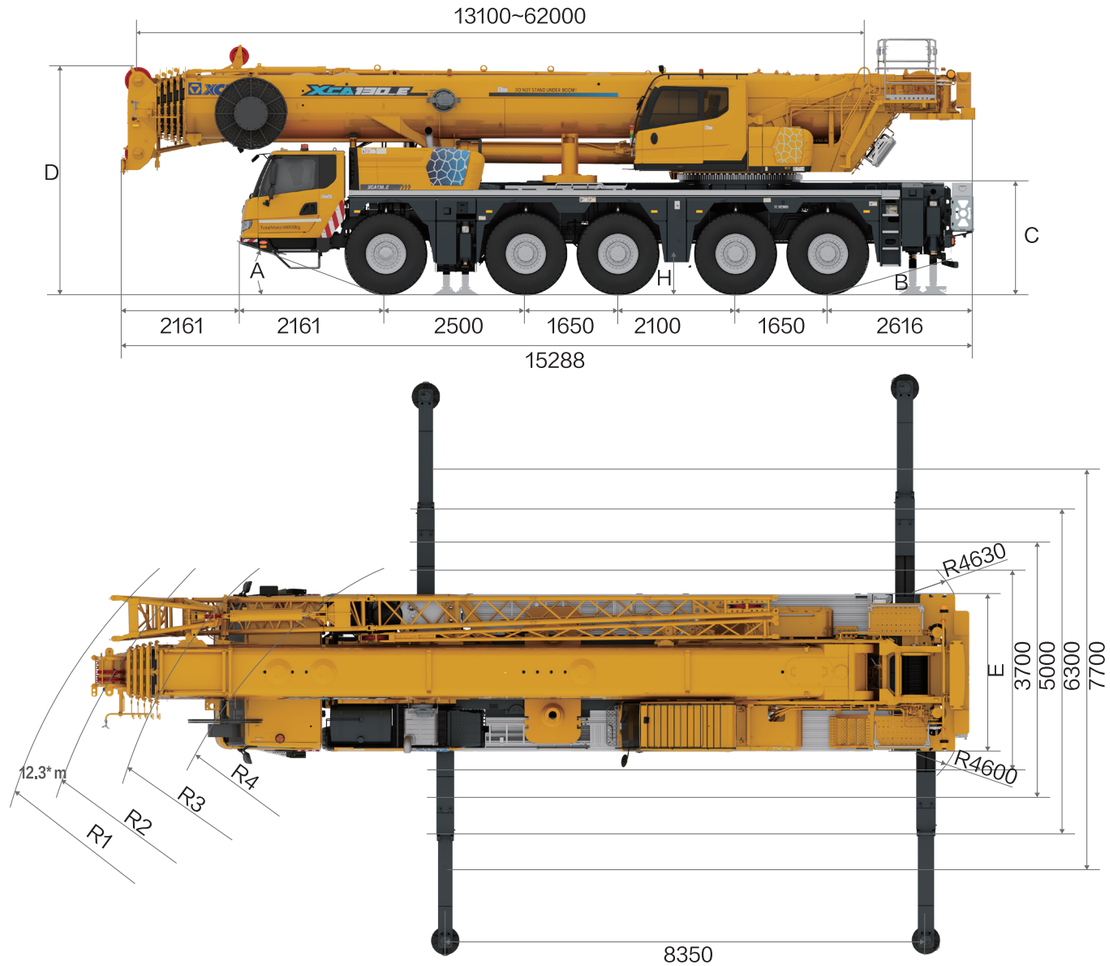

R: Tight turning steering mode

Counterweight	A	B	C	D	E	F	G	H	I
Dimension L/W/H(mm)	2380/9 80/873	2740/20 26/154	1270/20 26/462	1270/20 26/462	2740/20 26/186	2740/20 26/160	1133/14 50/952	2740/11 70/115	1200/3 84/650
Weight(t)	2.6	2.8	6	6	4.7	4.8	7	2.2	1.4

Working mode	44.5t	30.5t	25.8t	21t	15.7t	9t	6.2t	3.6t
Combinations	I+H+A+ B+C+D+ E+F+G*2	I+H+A+ B+C+D+ E+F	I+H+A+ B+C+D+F	I+H+A+ B+C+D	I+H+A+ E+F	I+H+ A+B	I+H+A	I+H

	A	B	C	D	E	R1	R2	R3	R4	H
Unit	°	°	mm	mm	mm	mm	mm	mm	mm	mm
385/95 R 25(14.00 R 25)	18	14	1911	3950	2750	12150	11650	10600	9000	380
445/95R25(16.00R25)	19	15	1961	4000	2750	12150	11650	10600	9000	380
525/80R25(20.5R25)	19	15	1961	4000	2850	12150	11650	10600	9000	380

Note: parameters for tire of 525/80R25 (20.5R25) are only for technical reference.

There is no 525/80R25 (20.5R25) configuration for WVTA approval.

Technical Parameter XCA130_E

Dimensions		Unit	Parameter
Length × Width × Height		mm	15288×2750×3950(14.0R25)
		mm	15288×2750×4000(16.0R25)
		mm	15288×2850×4000(20.5R25)
Wheel base		mm	2500+1650+2100+1650
Track		mm	2340（14.0R25）
		mm	2296（16.0R25）
		mm	2308（20.5R25）
Front/ Rear overhang		mm	2611/2616
Front/ Rear extension		mm	2161/0
Tire specification			Standard: 445/95R25（16.00R25）
			Optional:385/95R25（14.00R25）
			525/80R25（20.5R25）

Total Weight						
≤60 t	445/95R25	10x8x10	≤12 t	11 t	6.2 t	18.5 m
≤82.5 t	445/95R25	10x8x10	≤16.5 t	90 t	25.8 t	18.5 m

Engine	Unit	Parameter
Model	/	OM471LA, EU Stage V
Fuel tank capacity	L	460 L
Rated power	kW / r/min	360 kW / 1600 r/min
Max.output torque	N.m / r/min	2400 N.m / 1300 r/min

Travel	Unit	Parameter
Max. travel speed	km/h	80
Min. turning diameter	m	18
Min. ground clearance	mm	380
Approach angle	°	19
Departure angle	°	15
Braking distance (at 30 km/h)	m	10
Max. grade ability	%	60
Fuel consumption/100 km	L	65

Main performance		Unit	Parameter
Max. rated lifting capacity		t	130
Min. rated working radius		m	3
Max. load moment	Base boom	kN.m	4468
	Fully-extended boom	kN.m	2297
	Fully-extended boom + Jib	kN.m	1976
Outrigger span	Longitudinal	m	8.35
	Lateral	m	3.7/5/6.3/7.7
Hoist height	Base boom	m	12.1
	Fully-extended boom	m	61.5
	Fully-extended boom + Jib	m	92.5
Boom length	Base boom	m	13.1
	Fully-extended boom	m	62
	Fully-extended boom + Jib	m	94. 5

Working speed		Unit	Parameter
Boom raising from −0.5° to 82°		s	65
Boom fully extended		s	630
Max. slewing speed		r/min	1.65
Hoisting speed	Main winch	m/min	130
(single line,4th layer, no load)	Auxiliary winch	m/min	130
Outrigger extending and retracting time	Beam-Retracting	s	25
	Beam-Extending	s	20
	Jack-Retracting	s	55
	Jack-Extending	s	45

Hook block	Unit	Parameter
Standard	t	11 / 25 / 60 / 90
Optional	t	130

Load/Height Chart XCA130_E

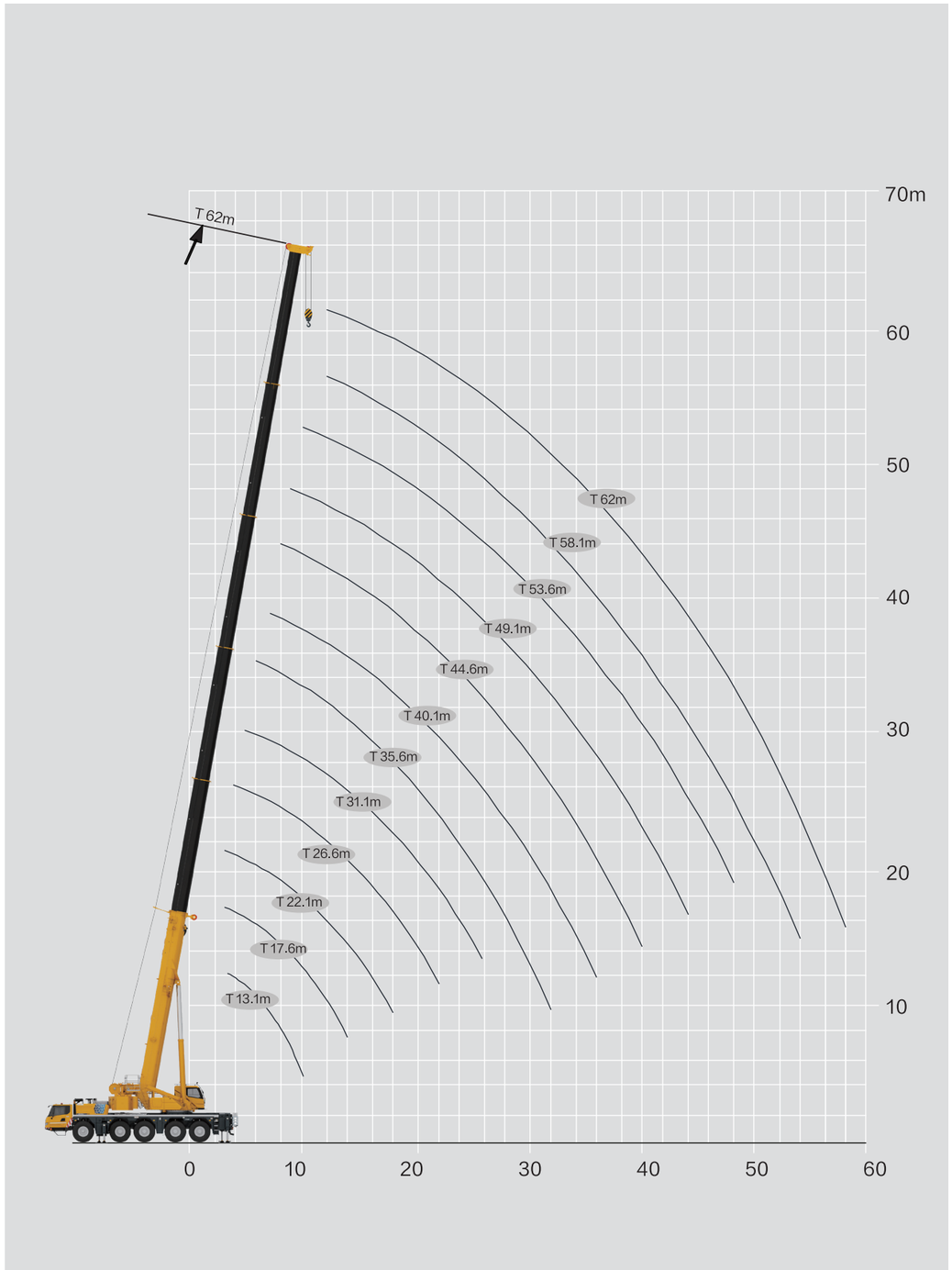

T 13.1–62m

13000 EN | 13.1–62m | 8.35m × 7.7m | 360° | 44.5t

	13.1	17.6	22.1	26.6	31.1	35.6	40.1	44.6	49.1	53.6	58.1	62	
3	130.0*	83.0	61.7										3
3.5	101.0	83.0	59.0										3.5
4	93.0	83.0	56.3	58.8									4
4.5	86.0	83.0	53.7	56.6									4.5
5	81.0	79.0	51.5	54.4	48.1								5
6	71.0	69.0	47.5	50.7	43.6	49.2							6
7	62.0	62.0	44.4	47.4	39.6	45.4	32.0						7
8	55.0	56.0	41.6	44.7	35.8	41.8	30.0	24.0					8
9	47.0	50.0	38.7	42.1	32.9	38.5	28.3	22.7	21.3				9
10	38.0	45.6	35.9	39.9	30.6	35.0	26.8	21.5	20.5	18.1			10
12		36.8	30.9	35.2	26.6	30.0	23.9	19.3	18.8	18.1	14.7	11.8	12
14		27.0	27.2	31.3	23.6	26.6	21.6	17.5	17.4	18.1	14.8	11.8	14
16			24.4	26.4	21.0	23.7	19.8	15.9	16.0	16.7	14.8	11.9	16
18			21.8	22.1	18.9	21.4	18.1	14.6	14.8	14.9	14.2	12.0	18
20				18.8	17.2	18.5	16.8	13.4	13.7	13.6	12.9	11.7	20
22				16.2	15.9	15.9	15.6	12.5	12.8	12.3	11.6	10.6	22
24					14.3	13.9	14.1	11.6	12.0	11.3	10.5	9.6	24
26					12.6	12.2	12.4	10.9	11.2	10.4	9.6	8.8	26
28						10.7	11.0	10.1	10.6	9.6	8.9	8.1	28
30						9.5	9.8	9.6	10.0	8.9	8.2	7.5	30
32						8.0	8.7	9.0	9.1	8.2	7.6	6.8	32
34							7.8	8.1	8.2	7.7	7.0	6.4	34
36							7.0	7.3	7.4	7.1	6.5	5.9	36
38								6.6	6.7	6.6	6.1	5.5	38
40								6.0	6.0	5.9	5.6	5.1	40
42									5.5	5.4	5.1	4.7	42
44									5.0	4.8	4.5	4.3	44
46										4.4	4.1	4.0	46
48										3.9	3.6	3.7	48
50											3.3	3.3	50
52											2.9	2.9	52
54											2.6	2.6	54
56												2.3	56
58												1.6	58

Notes: * Capacity class.