XC916E

XCMG

WHEEL LOADER

SOLID TO SUCCEED







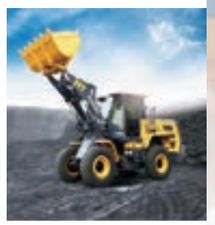









XCMG EARTHMOVING MACHINERY BUSINESS DIVISION

CUSTOMER SERVICE HOTLINE (IN CHINA): 400-110-9999

ADDRESS: NO. 99, KUNPENG NORTH ROAD, XUZHOU ECONOMIC DEVELOPMENT ZONE, JIANGSU PROVINCE, CHINA

ZIP CODE: 221004

TEL: 0516 87938888

EMAIL: sales@xcmg.com

SITE: http://www.xcmg.com

2023-11



INTRODUCTION OF XCMG

XCMG, as a leading enterprise valued of 100 billion RMB, with the largest scale, the best technology level, the largest export volume, and high competitiveness and influence in China's construction machinery industry, has been occupying the first place in China's construction machinery industry for decades, and it now ranks the third in the world industry and the 395th among the world's top 500 brands.

The main products by XCMG consists of 16 categories of equipment such as hoisting machinery, excavation machinery, concrete machinery, mining machinery, earth-moving machinery and road machinery, etc., as well as three categories of key components such as hydraulic system, transmission system and electric control system. Among above-mentioned, hoisting machinery ranks first in the world, and package solution of road construction and maintenance machinery, piling machinery and concrete machinery are among the first-class bloc in the world.

XCMG has accumulated more than 8000 approved patents, including more than 1900 invention patents and more than 130 PCT international patents. Entities of R&D centers, manufacturing plants or KD factories are in operation in more than 10 countries such as Germany, the United States, Brazil and India, XCMG has also acquired three European enterprises including Schwing in Germany. The Brazil manufacturing plant, with an investment of 350 million dollars to build up factories on a bare ground, has become a model of economic cooperation between China and Brazil. At present, XCMG products are exported to 187 countries and regions, covering 97% of the countries along "The Belt and Road" area. In export business to 35 countries, XCMG's proportion ranks NO. 1, with a steady first place within Chinese industry in terms of annual export volume and overseas income.

XCMG IN EUROPE

Since 1990s when XCMG was already a known brand within the industry in Europe, XCMG has been one of the major international manufacturers supplying products and service across the Continent. With its rapid development in recent years, XCMG is gradually building up an all-round network including: R&D department; local distribution, supply chain management and an integrated customer services and training center.

At present, XCMG has 3 subsidiaries in operation, with more than 100 multinational employees in Europe:

- ERC XCMG European research center GmbH
- EPC XCMG European purchasing center GmbH
- ESS XCMG European sales and services GmbH

XCMG is also holding a resource of more than 100 branches by local dealers throughout the Europe, generating a whole value chain that is serving the entire European market, including sales, service, financing, used equipment recycle, etc.

We actively and continuously implement our globalization strategy. Our first-class international team has many years of professional experience and excellent cross-cultural management capability.

With a strong combination of expertise and practical experience in a multicultural context, we create real value and provide a high level of return on investment to our European customers.

XCMG SCHWING Stetter FLUITRONICS hydraulic systems

Product Overview

The XC916E wheel loader is a new product of the XC9 series independently developed by XCMG Earthmoving Machinery Business Unit. It adopts hydromechanical transmission mode. The engine meets Stage V emission standards. The Machine also adopts an articulated frame and full hydraulic steering, quadruple pilot Hydraulic system, FNR, and shift integrated handle. The working device adopts a forward-rotating six-bar linkage mechanism, and is equipped with a quick-change device as standard. The integrated heating and cooling air conditioner is equipped as standard. The whole machine meets CE requirements.



Product Performance

Advanced technology

♦ Our products are compact in structure and convenient for container transportation. The adoption of the forward rotation six-link optimization technology makes the translation of the machine smoother, and the lifting movement of tools will be more stable. The whole machine adopts a new type of quadruple hydraulic control technology, with integrated pilot operating handle, which greatly improves the comfort.XC9 small loader is equipped with a new type of cab. Wide cab space, wide field of vision, comfortable operation feeling, and superior configuration of the whole machine meet the needs of the mid-to-high-end market.

Product Reliability

♦ The design of the structural parts of the whole machine adopts CAE simulation analysis to ensure a high safety factor. The front and rear frames adopt the overall frame heavy-duty structure, which has strong resistance and impact load capacity. The key components such as gearbox, axles, engines, pumps, and valves are selected from domestic reliable quality accessories.

Product Performance

Safty Design

♦ The braking system is safe and reliable. The integral cab is equipped with FOPS and ROPS. An emergency stop switch is equipped in the cab to avoid misoperation after parking.

Easy maintenance

♦ The whole machine adopts centralized pressure measurement technology of hydraulic joints, centralized electrical control box, flip-up hood, etc., which makes oil level inspection, oil filling, electrical maintenance, and filter maintenance more convenient and faster, to provide you with great service.



Flexibility and Versatility

♦ The whole machine adopts a central hinged swing structure, which can realize 9° center swing and ±36° hinged steering. The short tail design makes the turning radius smaller. The machine is equipped with a four-joint hydraulic quick-change structure as standard, which can meet the user's various machine and tool selection requirements.



Comfortable operation

♦ The machine is equipped with a new type of cab of the panoramic XC9 series, with textured interior, additional storage boxes, mobile phone storage boxes, etc. The FNR integrated pilot handle can meet the integrated operation habits of high-end market customers. The standard heating and cooling integrated air conditioner upgrade the operation comfort. Adjustable seat and steering column can be adapted to different percentile body needs. The whole machine uses Jack simulation technology and adopts the best channel design, to give you a luxurious driving experience.











The Main Technical Parameters

Overall dimensions

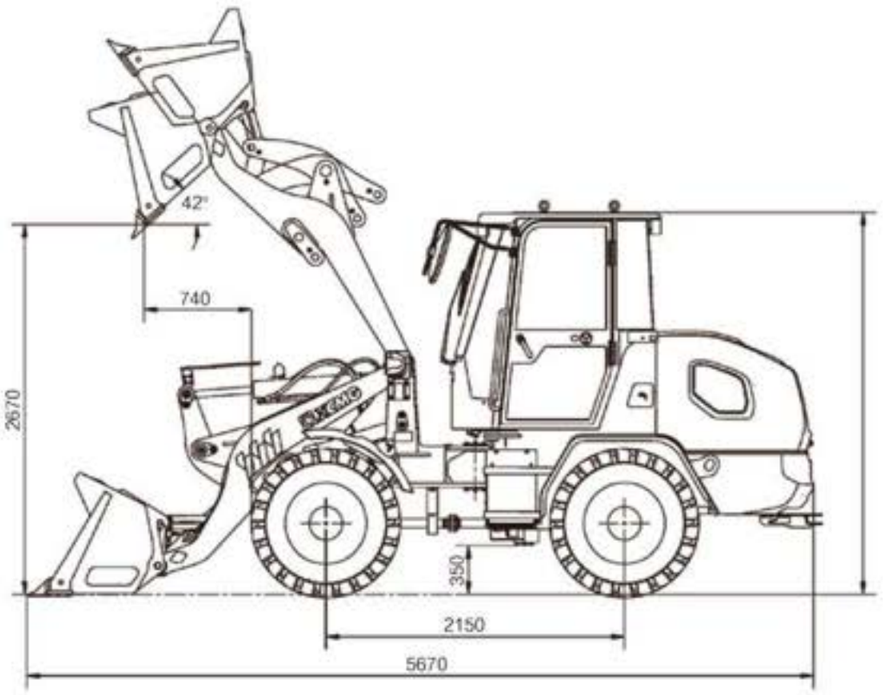

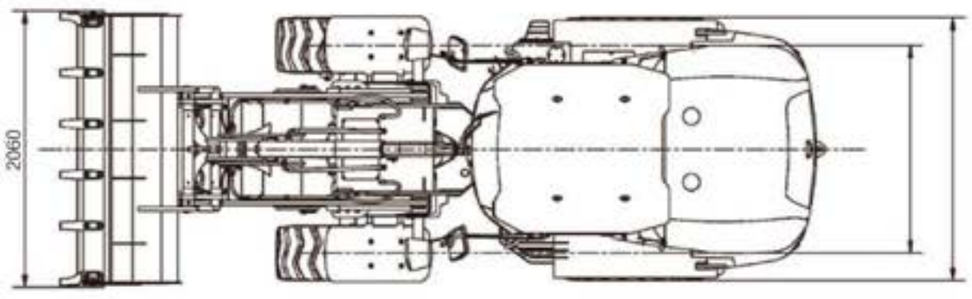

Main specifications

Description	Specifications	Unit
Rated bucket capacity	0.7	m^3
Rated working load	1600	kg
Operating weight	4560	kg
Dumping height	2400	mm
Dumping reach	780	mm
Wheelbase	2470	mm
Track	1500	mm
Overall length	5235	mm
Overall height	2550	mm
Bucket width	1980	mm
Maximum breakout force	40	kN
Maximum traction force	39	kN
Turning radius (Center of Outer tire)	4460	mm
Boom lifting time	≤5	s
Total cycle time	≤11	s
Tire type	16/70-16	-
Hydraulic flow	76	L/min
Driving Speed	Forward I/Reverse I 8	km/h
	Forward II/Reverse II 19	km/h
Minimum ground clearance	320	mm
Maximum lift height load	2300	kg
Tipping load	3200	kg

Optimum Services, XCMG Guaranteed



XCMG-approved attachments



Genuine parts



Extension of warranty



Financial solutions



Maintenance contract



Telematics

Professional Integrated Complete Solutions

The XCMG group has built a strong reputation based on the quality, reliability, and durability of its construction machinery. What's more, XCMG has gradually established a service network to constantly provide its local integrated and highly efficient complete solutions for all customers.

Full Range of Services Ready for you

In order to respond to your needs as fast as possible, XCMG experts are on their way to your job site from one of our facilities near you. A full range of services is available in order to reduce your total cost of ownership and increase your revenue.



XCMG Global Spare parts System





Mobile cranes



Excavators



Aerial work platforms



Wheel loaders



Road machinery


















XCMG
XDE240
XE4000